TTL11.5-105-260CL-D

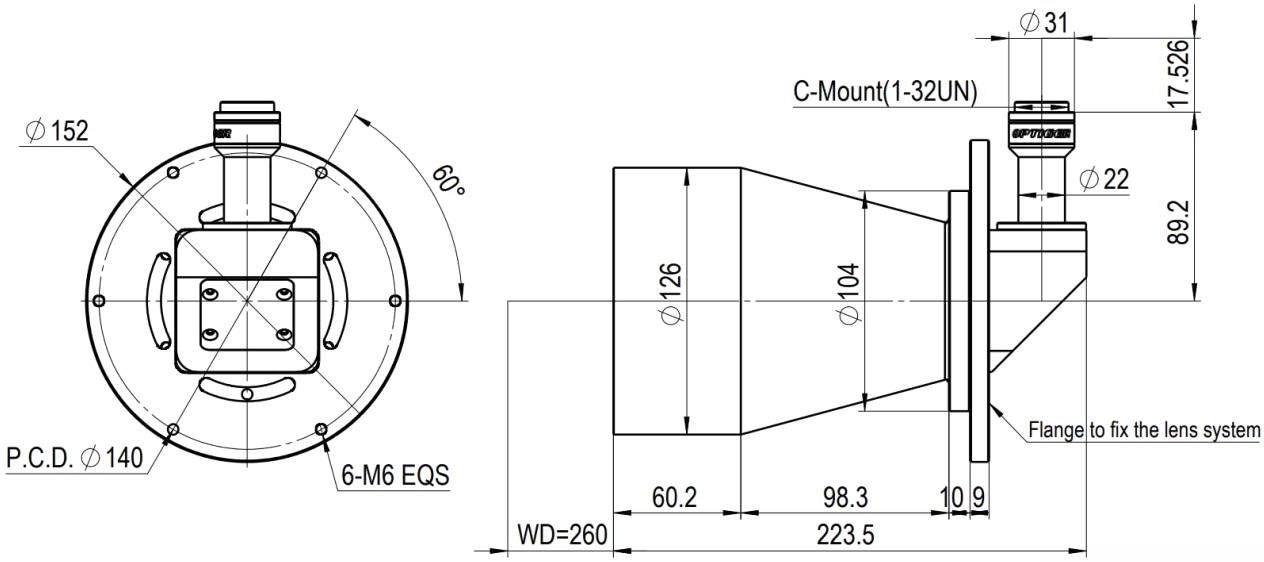

Unit: mm

Specifications

Max. FOV(mm)	105
Sensor Size (mm)	11.5
Magnification	0.110
WD (mm)	260±5
Effective F-number	16
Object-side Resolution (um)	98.02
DOF (mm)	106.71
Measured Telecentricity	0.05°
Measured Distortion	0.05%
Mount	C-Mount
Length(mm)	223.5
Diameter (mm)	126
Weight (g)	2613

GERMAN TECHNOLOGY

DEEP DOF BI-TELECENTRIC LENSES

Features

Available for cameras with sensor size of 2/3"

Available for cameras with pixel size of 3.45um

FOV (mm*mm)

1/2"(6.40X4.80)	58.20×43.60
2/3"(8.45X7.07)	77.15×64.55
Max Sensor Size (8.83X7.39)	80.62×67.47

TEL: 022-58627718

Email: enquiry@optiger.com.cn